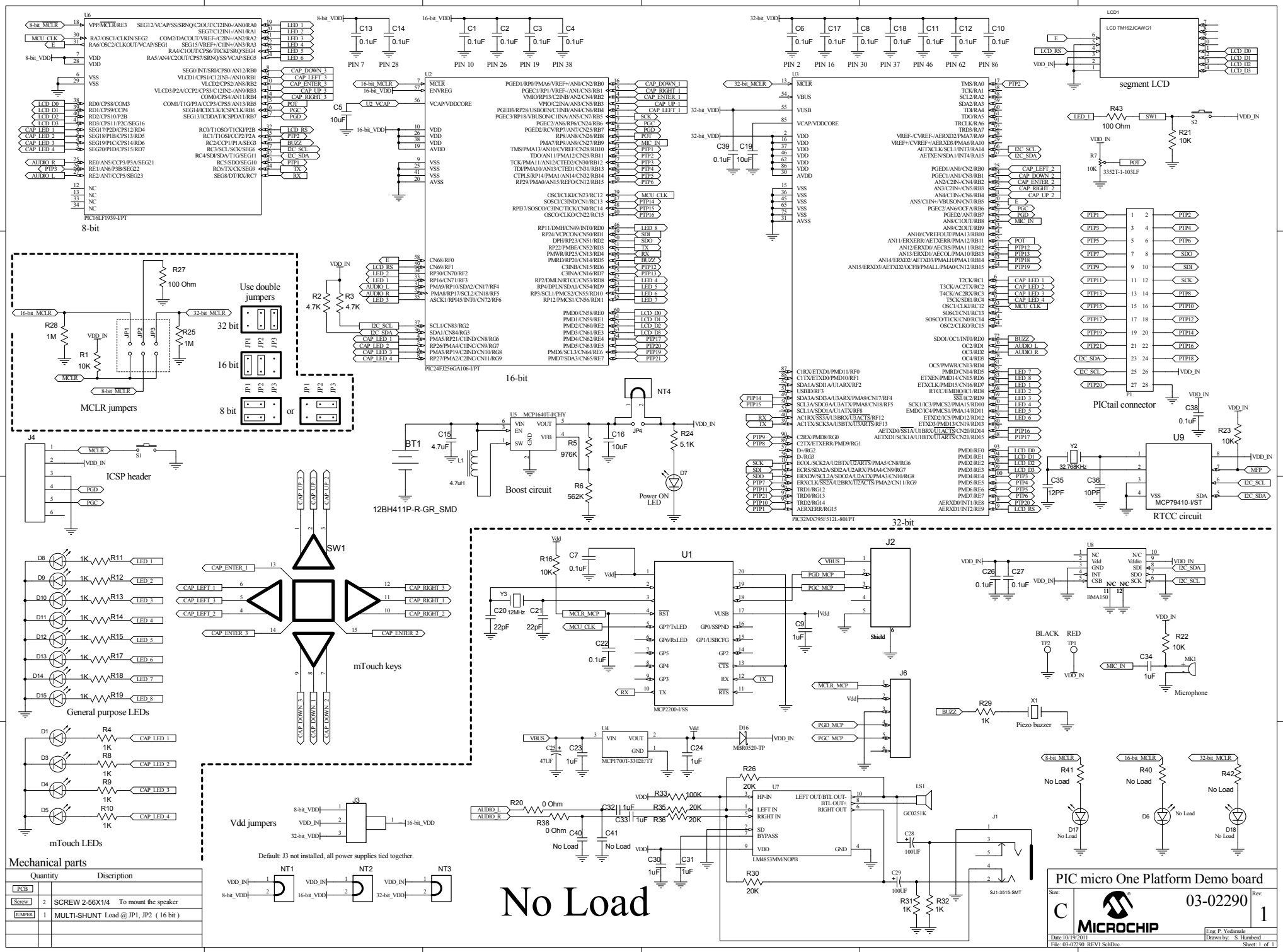
8-bit
16-bit
32-bit
segment LCD
PICtail connector
RTCC circuit
MCLR jumpers
Use double jumpers
ICSP header
Boost circuit
12BH411P-R-GR_SMD
Power ON LED
mTouch keys
General purpose LEDs
mTouch LEDs
Vdd jumpers
Default: J3 not installed, all power supplies tied together.
Microphone
Piezo buzzer
No Load
Mechanical parts
Quantity
Discription
PCB
Screw
2
SCREW 2-56X1/4
To mount the speaker
JUMPER
1
MULTI-SHUNT
Load @ JP1, JP2 (16 bit)
PIC micro One Platform Demo board
03-02290
Rev:
1
Size:
C
MICROCHIP
Date:10/19/2011
Eng: P. Yedamale
Drawn by: S. Humberd
File: 03-02290 REV1.SchDoc
Sheet: 1 of 1